Renaissance CEL Series - Recessed

COMMERCIAL GRADE EDGE-LIT LED EXIT

PROJECT:
FIXTURE TYPE:
LOCATION:
CONTACT/PHONE:

PRODUCT DESCRIPTION

The Renaissance Series recessed mounted edge-lit exit features a recessed mounting capability for both drywall and drop ceilings. The crystal clear lens panel provides excellent light distribution, exit visibility and quick snap-in installation. The Renaissance incorporates long life, energy efficient LED lamps that reduce energy costs and eliminate routine lamp maintenance. The under five-minute installation time makes it the fastest installed edge-lit exit on the market today.

PRODUCT SPECIFICATIONS

CONSTRUCTION

Crystal clear acrylic face panel • Mirrored or white divider provided on double face signs or single face signs that are needed with a non-clear background • 6" letters with 3/4" stroke width • Field-applied chevron directional indicators with pre-applied, easily removable installation template • Red or green letters • Steel recessed housing with plug in connectors for quick and easy trim installation • Includes telescopic bar hangers with built-in graduated scale that extend from 14" to 24" and can be installed in any of the four sides of the housing • The bar hangers are suitable for joist installation and come with a T-bar slot for grid ceiling installation • Bar hanger ends are designed with a nail-in tab for initial positioning • Vertically adjustable up to 1" to accommodate different ceiling thickness.

ELECTRICAL

Dual voltage 120/277VAC • Isolating transformer is mounted on the rescessed housing • A quick connector makes attaching the trim to the housing fast and easy • Recessed housing comes with 3/4" knock-outs for AC input in different locations • An AC ON light shows when the unit is powered up.

LAMPS

Long life, energy saving LED lamps ÅRed or Green LED/letters ÅSigns consume less than 4 watts.

BATTERY

Sealed, 4.8V maintenance-free nickel cadmium • Battery will operate sign for a minimum of 90 minutes in the event of a power outage. • Temperature rating is 0-50 degrees C.

CODE COMPLIANCE UL924 ÅDamp location rated ÅNFPA 101 Life Safety Code compliant ÅNEC and OSHA compliant.

WARRANTY

5-year warranty. Product specifications subject to change without notice.

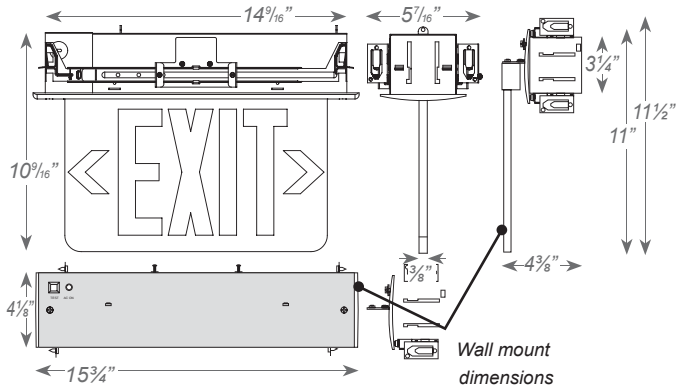

INSTALLATION

MOUNTING

Ceiling recessed • Includes telescoping bar hangers for joist or T-bar ceiling applications • Vertically adjustable to accommodate varying ceiling thickness • Can be installed in drywall or suspended ceilings.

ORDERING INFORMATION

model	faces	operation	letter/panel	trimplate color	mounting	options
CEL	1 = Single	A = AC Only	RC = Red on Clear	WH = White	R = Ceiling Recessed	SD[1] = Self-Diagnostics
	2 = Double	B = Battery Backup	GC = Green on Clear	BL = Black	WR = Wall Recessed	DLC[2] = Dual Circuit Input
			RM = Red on Mirror	BA = Brushed Aluminum		SL = Special Lettering
			GM = Green on Mirror			USA = Assembled in USA
			RW = Red on White			
Notes			GW = Green on White			

[1] Not available on AC units

[2] AC only, use with inverter or generator applications only

Ordering Example: CEL-1-B-RC-BA-R-SD

Mule Lighting , Inc. 46 Baker Street Providence, RI 02905 800 556-7690 P 401 941-2929 F www.mulelighting.com