CATALOG NUMBER	TYPE
PROJECT NAME	**DATE**

EU-HD-12/24

HIGH-CAPACITY STEEL EMERGENCY LIGHT
320W TO 480W AT 12 OR 24 VDC

SPECIFICATIONS

FEATURES
- 12V or 24V high-capacity steel emergency unit
- Unit capacity: 320W, 385W, 430W, or 480W
- Easy installation facilitated by universal mounting plate and keyhole slots

CONSTRUCTION
- 20-gauge steel construction
- Available with two, three, or no lamp heads

LAMP
- Optional integral (PAR 36) or remote lamp heads are available
- 9W and 50W lamps offered as integral lamps; consult factory for more options

ELECTRONICS
- Dual-voltage 120/277 60Hz
- AC lockout
- Brownout protection
- AC indicator light with test switch
- Voltmeter is standard
- Bi-color LED changes color from red (high charge) to green(float) to indicate full charge

BATTERY
- Lead-calcium battery is standard and provides a minimum of 90 minutes of illumination in emergency mode
- Operating temperature range: 0 °C to 40 ° C

COMPLIANCE
- Meets or exceeds UL 924, NFPA 101, NEC and OSHA illumination standards

WARRANTY
- 5-year warranty on housing and electronics. Battery is prorated

DIMENSIONS

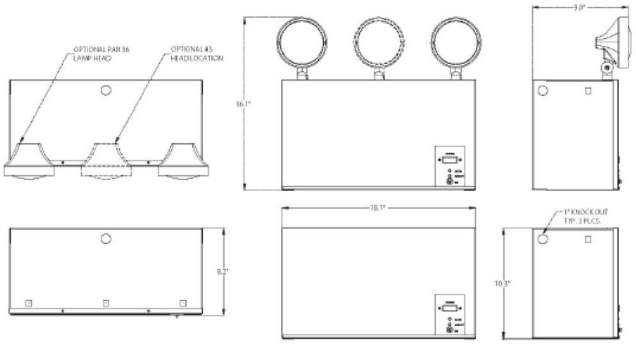

ORDERING GUIDE

MODEL	VOLTAGE	MAX UNIT WATTAGE	INTEGRAL LAMP HEADS	INTEGRAL LAMP WATTAGE [1]	HOUSING COLOR	OPTIONS
EU-HD HD Emergency Unit	**12** 12 Volts DC **24** 24 Volts DC	**320** 320 Watts **385** 385 Watts **430** 430 Watts **480** 480 Watts	**NH** No Heads **2T** 2 Top Heads **3T** 3 Top Heads	**9** 9W 12V Lamp **20** 20W 24V Lamp	**W** White **SP** Special Color	**LC** Line Cord (3ft) **220** 220 VAC **TD-120**[2] 120 VAC Time Delay **TD-277**[2] 277 VAC Time Delay **MH** PAR36 Metal Heads

Notes:
1. *Other wedge base, sealed beam, and bi-pin lamps are also available. Consult Factory.*
2. *Must specify AC input voltage and delay time*

ASTRALITE, INC. 20 POCONO ROAD BROOKFIELD CT 06804 203.775.0172 (P) CS@ASTRALITELIGHTING.COM WWW.ASTRALITELIGHTING.COM